mm [inch]

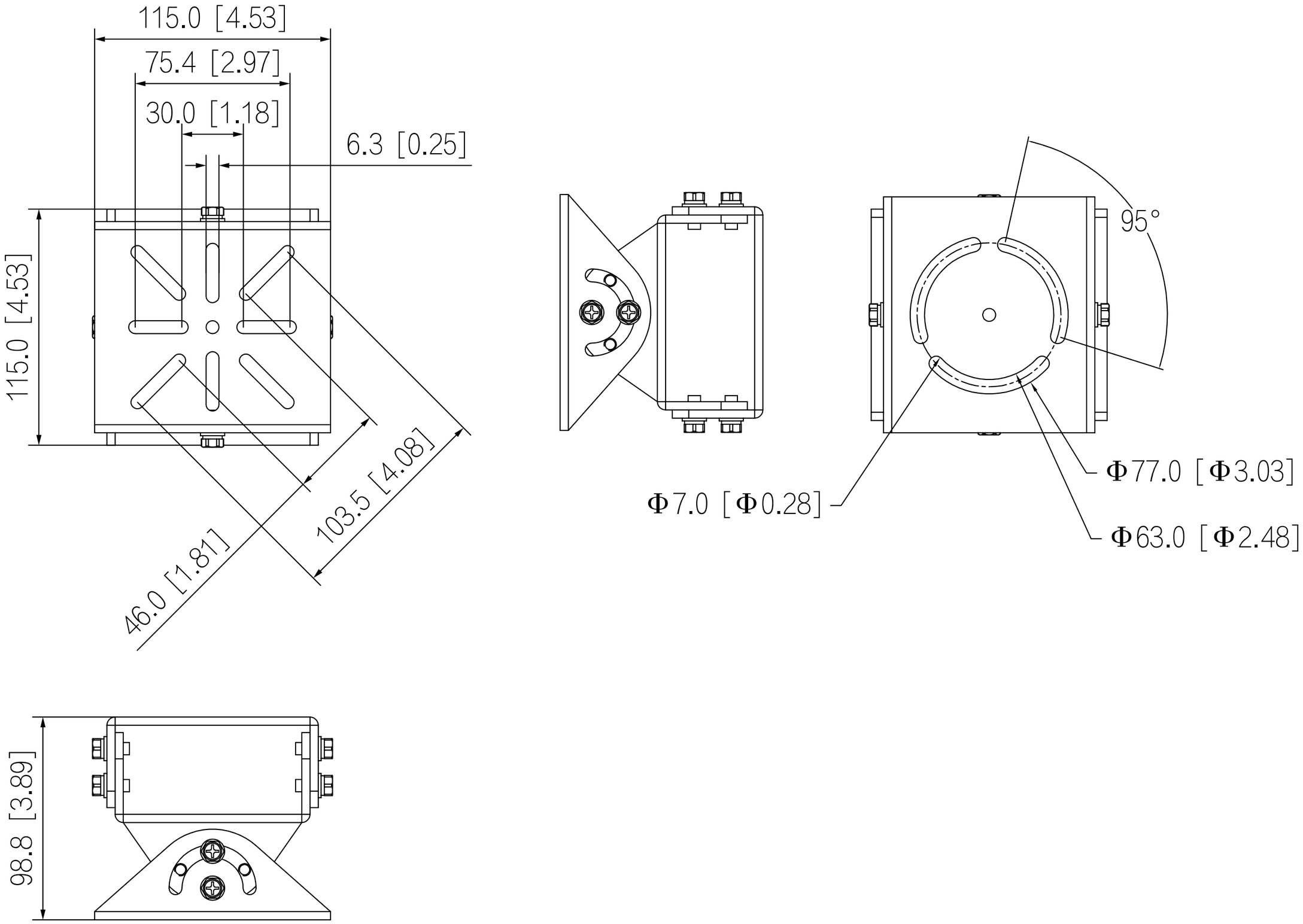
115.0 [4.53]
75.4 [2.97]
30.0 [1.18]
6.3 [0.25]
115.0 [4.53]
103.5 [4.08]
46.0 [1.81]
95°
Φ7.0 [Φ0.28]
Φ77.0 [Φ3.03]
Φ63.0 [Φ2.48]
98.8 [3.89]