mm [inch]

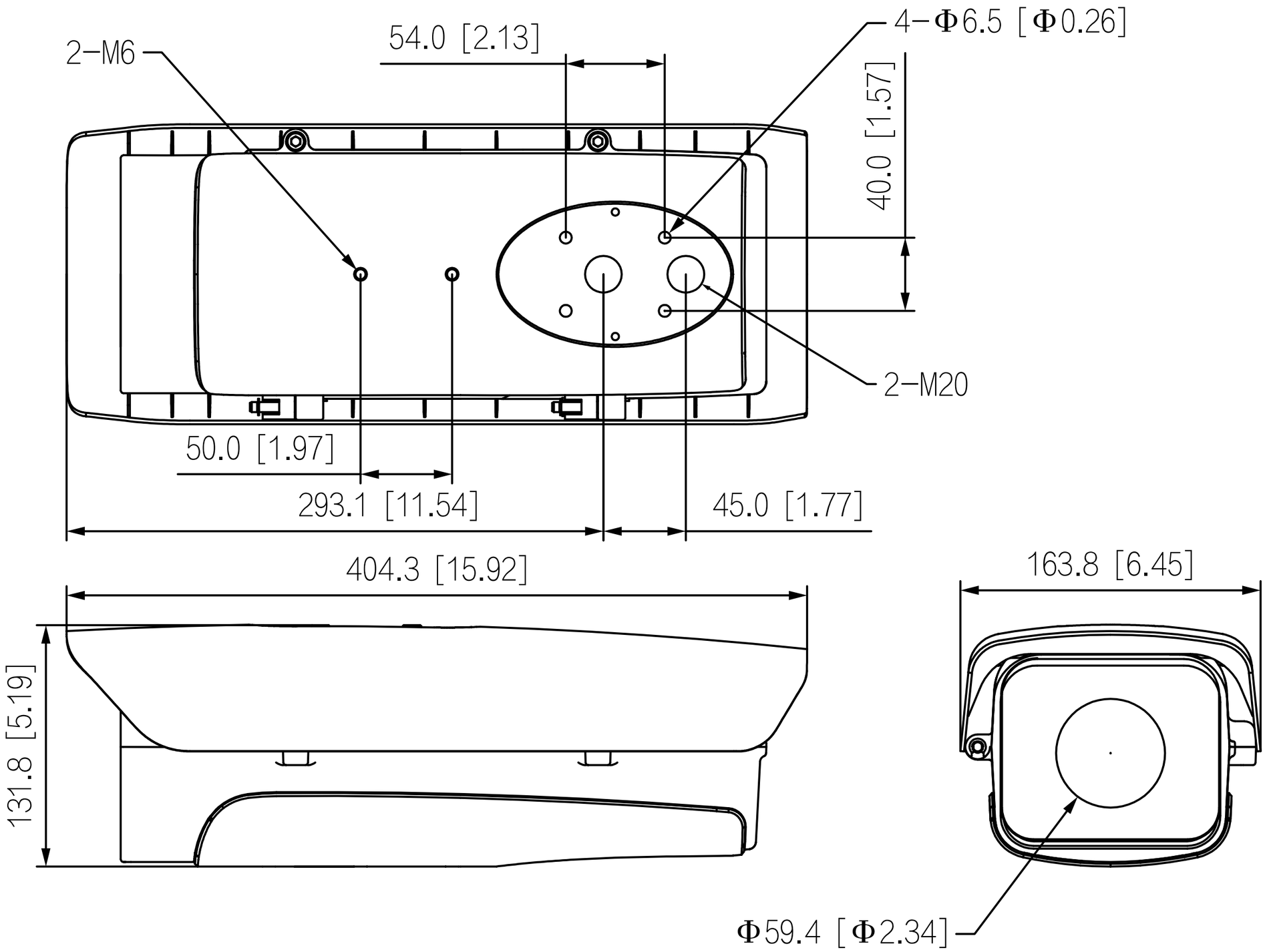
2-M6
54.0 [2.13]
4-Φ6.5 [Φ0.26]
40.0 [1.57]
2-M20
50.0 [1.97]
293.1 [11.54]
45.0 [1.77]
404.3 [15.92]
131.8 [5.19]
163.8 [6.45]
Φ59.4 [Φ2.34]