mm [inch]

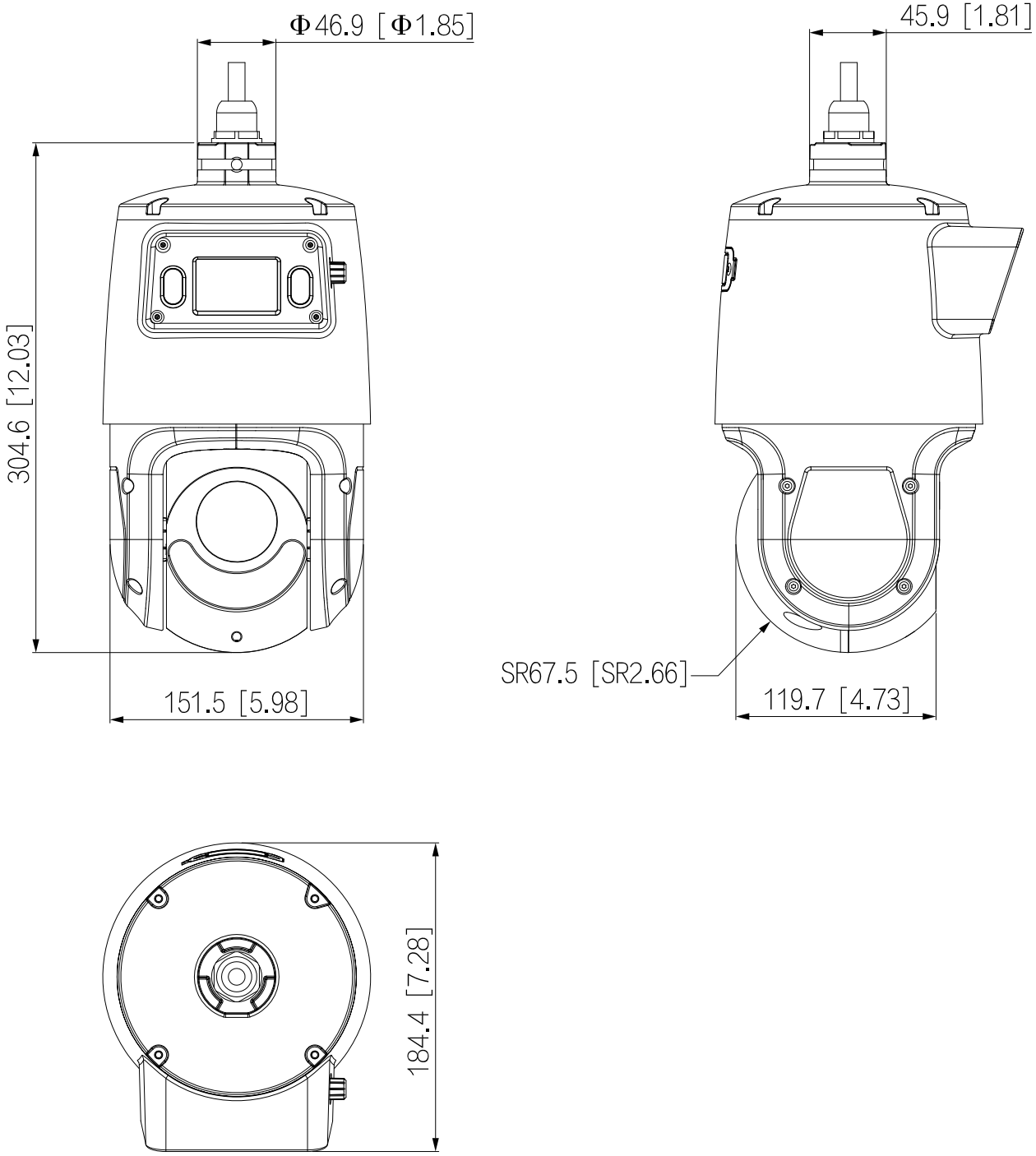
Φ46.9 [Φ1.85]
45.9 [1.81]
304.6 [12.03]
151.5 [5.98]
SR67.5 [SR2.66]
119.7 [4.73]
184.4 [7.28]